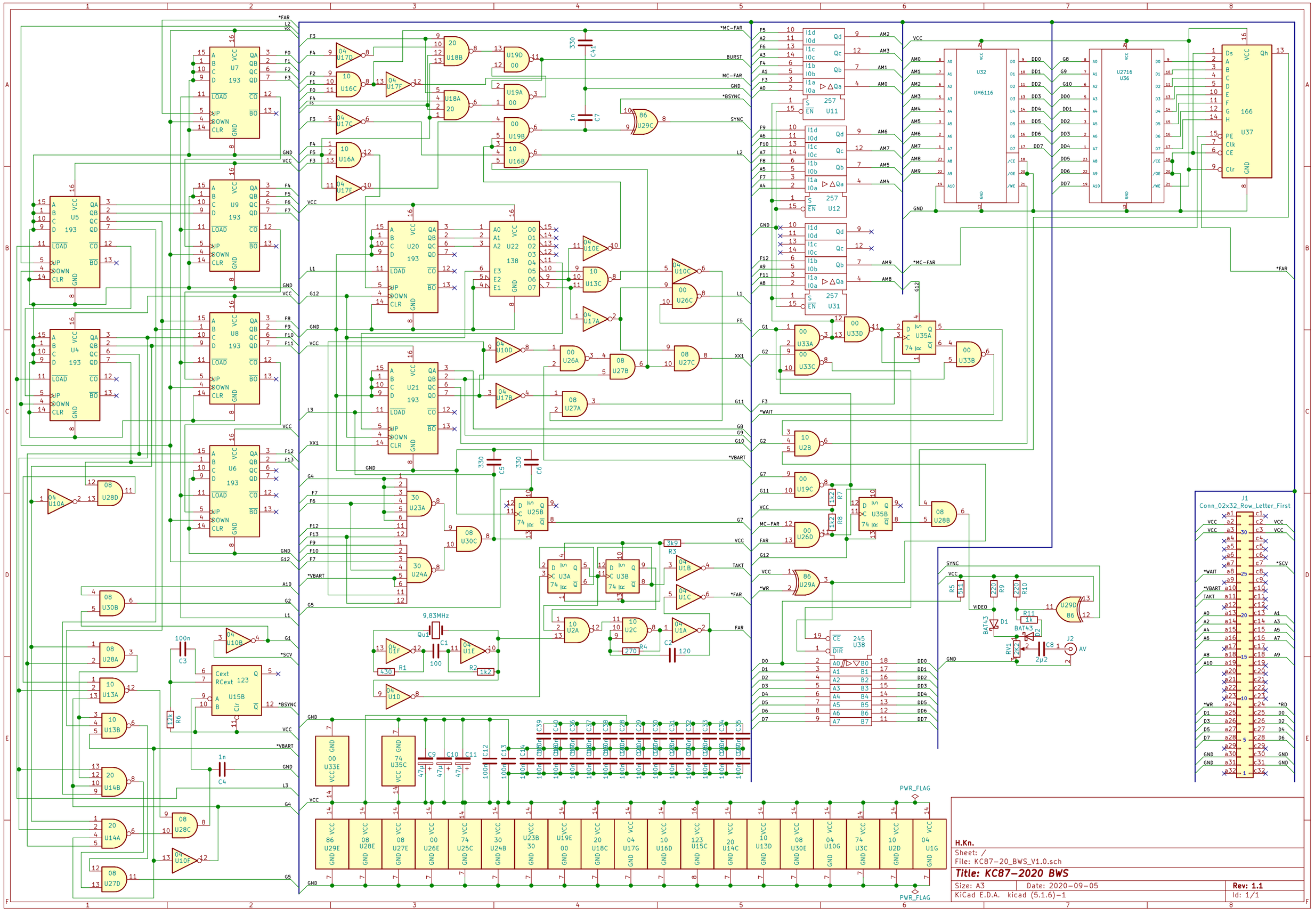

H.Kn.

Sheet: /

File: KC87-20_BWS_V1.0.sch

Title: KC87-2020 BWS

Size: A3	Date: 2020-09-05	Rev: 1.1
KiCad E.D.A. kicad (5.1.6)-1		Id: 1/1